FEMALE END VIEW	MALE END VIEW	WIRING DIAGRAM

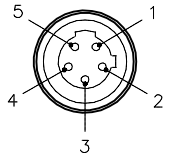

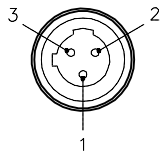

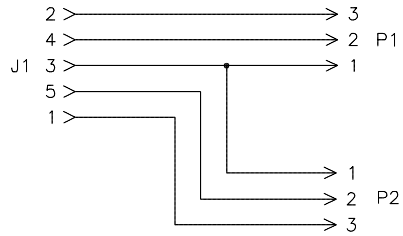

SPECIFICATIONS

CONTACT CARRIER MATERIAL/COLOR	NYLON/BLACK
MOLDED HEAD MATERIAL/COLOR	TPU/YELLOW
CONTACT MATERIAL/PLATING	BRASS/GOLD
COUPLING NUT MATERIAL/PLATING	BRASS/NICKEL
RATED CURRENT [A]	4.0 A
RATED VOLTAGE [V]	250 V
OUTER JACKET MATERIAL/COLOR	PVC/YELLOW
CONDUCTOR INSULATION MATERIAL	PVC
NUMBER OF CONDUCTOR [AWG]	5x22 AWG (TRUNK), 3x22 AWG (BRANCHES)
TEMPERATURE RATING	−40°C to +105°C (−40°F to +221°F)
PROTECTION CLASS	MEETS NEMA 1,3,4,6P AND IEC IP67

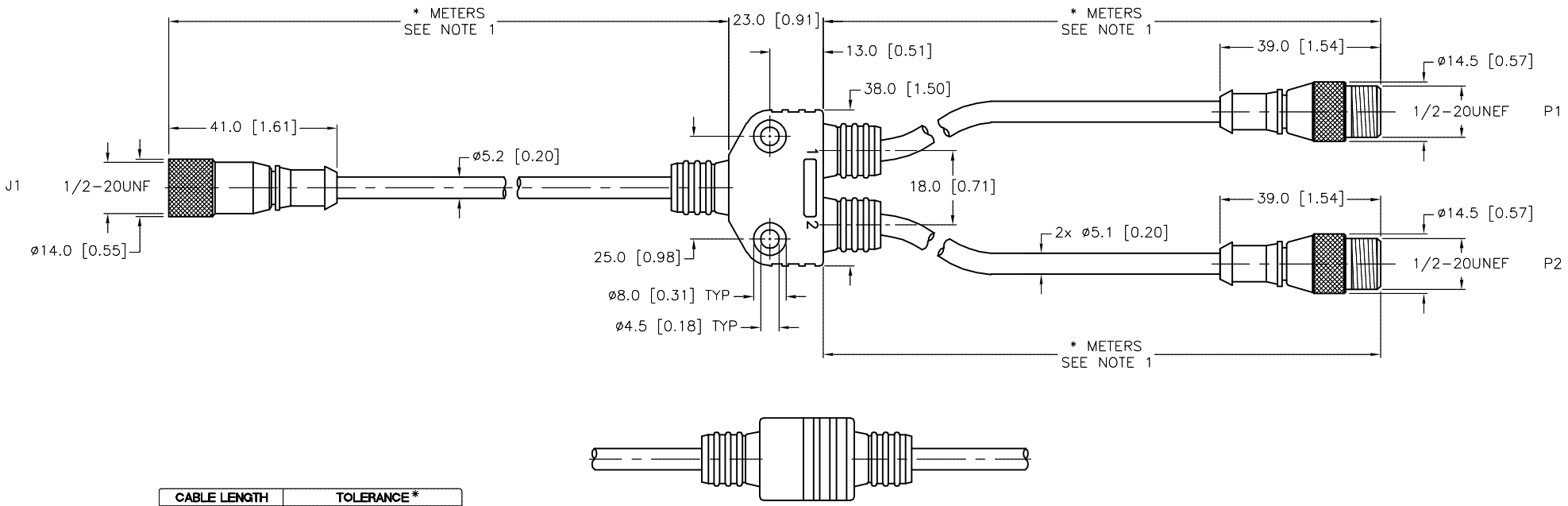

CABLE LENGTH	TOLERANCE *
ALL LENGTHS	+ 4% (OR 50mm) OF LENGTH − 0% (OR 0mm) OF LENGTH WHICHEVER IS GREATER
STRIP LENGTH	**TOLERANCE ***
0−7mm	±0.5mm
8−29mm	±1.0mm
30−49mm	±2.0mm
50−69mm	±3.0mm
70−100mm	±4.0mm
OVER 100mm	±5.0mm
* UNLESS OTHERWISE SPECIFIED	

SOURCE DRAWING - FOR REFERENCE ONLY

1. /CS10110 DESIGNATES VB2 TO BRING WORLD CLAMP SENSOR INTO TURCK MICROFAST JUNCTION BOX.

REV	DESCRIPTION	BY	DATE	ECO NO.
E	UPDATED GRN CONDUCTOR TO GRN/YEL PER ECO	TV	09/08/17	60438

RELATED DOCUMENTS
1.
2.
3.
4.

MATERIAL

FINISH

3RD ANGLE PROJECTION

ALL DIMENSIONS DISPLAYED ON THIS DRAWING ARE FOR REFERENCE ONLY

CONTACT TURCK FOR MORE INFORMATION

THIS DRAWING IS CONFIDENTIAL AND THE PROPERTY OF TURCK INC. USE OF THIS DOCUMENT WITHOUT WRITTEN PERMISSION IS PROHIBITED.

TURCK

3000 CAMPUS DRIVE
MINNEAPOLIS, MN 55441
1−800−544−7769
(763) 553−7300
(763) 553−0708 fax
www.turck.us

DRFT CBM | DATE 09/14/00
APVD | SCALE 1=1.5

UNIT OF MEASUREMENT
MILLIMETER [INCH]
DO NOT SCALE THIS DRAWING

DESCRIPTION
VB2−KB 5T−0.3/2SB3T−0.3/0.3/CS10110

IDENTIFICATION NO. U2517−47
REV E

FILE: U2517−47
SHEET 1 OF 1

Approved 09/12/2017, work order #144218 by A.A.